IEA Webinar on 'Technical secure integration of large shares of converter based power sources'

Grid Forming Capabilities

ENTSO-E Technical Group on High Penetration of PEIPS

25th of March 2020

Presented by the Technical Guidance Team of ENTSOE Connection Network Codes

entsoe

ENTSO-E in numbers

43 TSOs, **36** countries

500+ million citizens served

478 132 km cross-frontier transmission lines

1 136 795 MW net generation capacity

3 597,1 TWh electricity consumpion

424 139 GWh of electricity exchanged between TSOs

Members of Technical Group High Penetration - TG HP

Wind Manufacturing Industry:
Peter Christensen, Vestas, Denmark / substituted recently by Gert Karmisholt Andersen
Matthias Seidel, Senvion, Germany / substituted recently by Sigrid Bolik
Sönke Engelken, Enercon, Germany,
Thyge Knueppel, SiemensGamesa, Denmark,
HVDC Manufacturing Industry:
Athanasios Krontiris, ABB, Germany,
Klaus Wuerflinger, Siemens, Germany,
PV Manufacturing Industry:
Thorsten Bülo, SMA, Germany,
Power System Analysis tool providers/Consultants:
Bernd Weise, DIgSILENT, Germany,
Helge Urdal, Urdal Power Solutions, UK,
Academia:
Agusti Egea, University of Strathclyde, UK,
Prof. Jens Fortmann, HTW Berlin, Germany,
System Operators:
Jőrg Jahn, TenneT TSO, Germany / substituted by Mario Ndreko
Saeed Salehi, 50Hertz Transmission, Germany,
Ioannis Theologitis, ENTSOE, Belgium

Differentiation of Power Park Module (PPM) or HVDC Converter Systems (HCS) Capabilities

Class 1 PPMs / HCS

- Full frequency operating range
- Full voltage operating range
- Basic reactive controls – e.g. Unity Power Factor
- LFSM-O
- Complies with local power quality requirements (e.g. harmonics / unbalance current)

Class 2 PPMs / HCS

- Fault Ride-Through
- Voltage control – steady state
- Voltage control – dynamics
- Voltage control – at P=0
- FSM
- LFSM-U
- Provides damping
- Fast Fault Current Injection (FFCI; see IGD)

Issues / challenges potentially remaining even with Class 2 converter capabilities
if PEIPS penetration moves **beyond 60% towards 100%** of instantaneous power demand

GFC considerations linked to satisfying the system needs
TG HP focus on seven challenges / characteristics during high penetration

Class 3 PPMs and HCSs: future capabilities in order to allow up to 100% penetration

Therefore the focus of the TG HP regarding **GF capabilities** has been exhausted on the following challenges:

1. Creating **system voltage**
2. Contributing to **Fault Level**
3. Contributing to **Total System Inertia** (limited by energy storage capacity)
4. Supporting system **survival to allow effective operation of Low Frequency Demand Disconnection (LFDD)** for rare system splits.
5. Acting as a **sink to counter harmonics & inter-harmonics** in system voltage
6. Acting as a **sink to counter unbalance in system voltage**
7. Prevent **adverse control system interactions**

Capability 1:“Create system voltage”

Voltage source capability

- The PPM or HCS provides a **three-phase voltage** which does not rely on an externally provided firm clean voltage
- Within the capability of the source, the **voltage is maintained in amplitude, frequency and phase angle** independently from a load connected to the source
- A stand-alone, **stable “island-operation” is possible**: Load flow is determined by the characteristics of loads and current or power-controlled generators connected to the system

Capability 1:“Create system voltage”

Parallel Operation Capability

Capability to operate in parallel with other **AC voltage sources**

Capability to provide robust power sharing and “inherent” mechanisms rather than relying on external control set-points (e.g. f(P)-droop)

The resulting **operating point may depend on**:

- load
- internal control
- optional internal or external control set-points

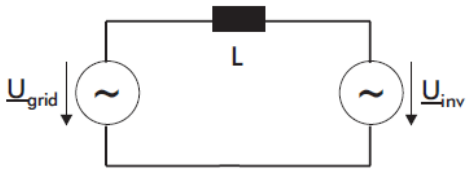

equivalent circuit

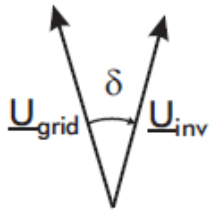

phasor diagram

Capability 1:“Create system voltage”

Dynamic Capability

- **Ride through and maintain synchronism** during **transient events** like grid faults and load steps in the system
- **Supply linear and nonlinear loads** of active and reactive power with a supply voltage of commonly accepted quality (specify e.g. THDU at given THDI) stationary
- **Provide transient active and reactive power** resulting from load steps
- **Limit and control the rate of change of voltage angle** in transient conditions in order to ensure overall system stability, e.g. following system splits

Capability 2: Contribute to fault level

Avoid the risk of voltage collapse by limiting the impact of a grid faults

The **grid forming converter control** (regardless of the technology implementation), **behaves as a Thevenin source and impedance,** controlled in frequency and in amplitude.

Required capability of the PPM / HCS:

- Positive and Negative Phase Sequence **current injection within first cycle** to limit the voltage drop during low impedance grid faults
- Contribution to a stable voltage recovery after the fault

If current limitation is necessary during voltage drops in the network, two options will be available:

a) **switch over to current control** during the fault period in order to limit the current to below the rated current capacity of the converter

b) **implement some current clipping features** (done either by HW or SW depending on converter technology)

Capability 3: Contribution to inertia

Substitute inertia from synchronous machines

Inertial response for synchronous machines is defined:

- Energy exchanged between the grid and the rotor of an electrical machine in the case of a frequency event
- Characterized by gain and damping factors (H and D)

Their **rotating mass provides inherently stored energy** that in combination with their voltage source characteristic

- **counteracts voltage angle, amplitude and frequency perturbations** and therefore
  - reduces the **rate of change of frequency** in case of load steps
  - helps to **limit voltage steps by providing a source of active power** if needed

Capability 3: Contribution to inertia

Capability to provide inertial response

Inertia provided by GFCs could be:

- specified / designed to be similar to synchronous machines
- chosen (by the TSO) to be substantially different by giving greater emphasis on damping

From the manufacturers point of view

- important for a generic inertial characteristic is that **it can be fine-tuned for specific system needs**
- in future it could be **possible to vary the inertial and damping gains** based on varying grid needs

General considerations on inertial response from PEIPS: Energy for inertial response may be taken from:

- rotating mechanical structures
- headroom created for PV
- energy storage system

Capability 3: Contribution to inertia

Capability to provide inertial response

Considerations for converters

- Inertial response is **disturbance to power balance in the DC link**
- Converter is **balancing power across DC link**
- Grid forming converter control is only frontend
  - **needs backed up** by suitable source of power (elec. storage, plant, headroom, …)!
  - Otherwise, DC link will collapse

Normal operation: $P_{net}=P^*_{conv}=P_{dc}$

Inertial response: $P_{net}=P^*_{conv}+P_{Disturb}=P_{dc}+P_{Refill}$

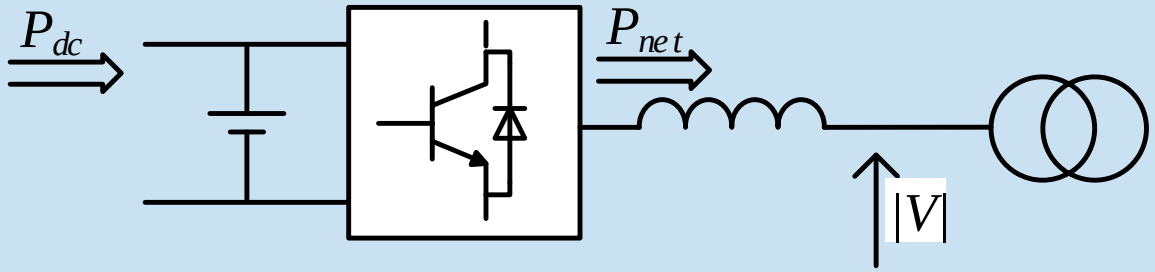

Capability 4: Support System survival to allow effective LFDD

Problem

- **After a system split, islands may consist close to 100% of PEIPS** with no synchronous generators and therefore in principle very limited system strength
- preliminary analysis shows **a risk of near instant system collapse** (say <200ms), prior to LFDD operation.

Needed Characteristics and potential effect:

- **Contribution to system strength** and voltage, frequency and angle stability following a sudden load change event (e.g. system split)
- Operating as a **voltage source behind an impedance**
- **Currents are determined by the network and loads** and not the converter control systems

Studies have shown that **even when operating a system close to 100% PEIPS and experiencing system splits with very large % imbalance, the system can avoid collapse, if system strength is delivered by applying adequate volume of well designed GFCs** (order of 25%).

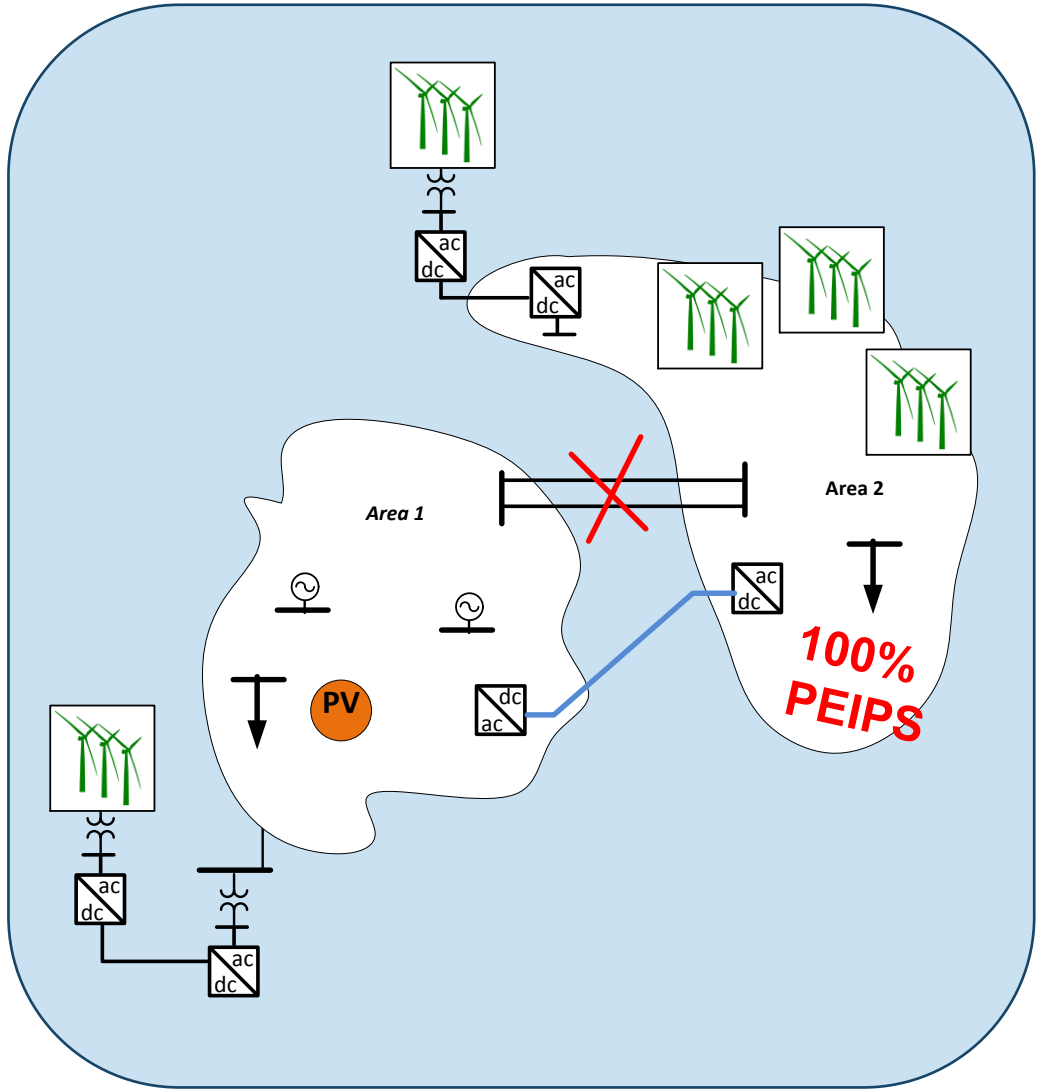

Capability 5/6: Sink for harmonics and unbalance

Main Objective: Keep existing level of power quality (voltage quality) using harmonic and unbalanced current flow

Synchronous machines today provide a low impedance to harmonics and unbalance.

Damping is provided through the resistive properties of other components.

Approach / Characteristics of the GFC

- Provide a passive, damping response in the harmonic frequency range
- Provide low negative phase sequence (NPS) impedance

The characteristic could be either:

- mainly inductive, similar to a synchronous machine
- inductive-resistive, providing potentially superior performance to a synchronous machines

Implications

Additional harmonics / unbalanced current flow is an additional load on the converter and needs to be considered in design

Capability 7: Prevent adverse control interactions

Phenomenon

When a power converter is connected to the electrical grid, the overall network resonances vary because of

- the connection of the converter passive components and,
- the impact of the converter's active behaviour.

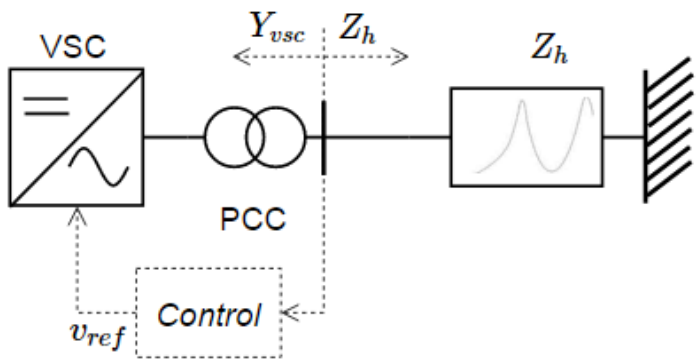

Figures taken from Cigré WG B4.67 Technical Brochure 754, "AC side harmonics and appropriate harmonic limits for VSC HVDC", Feb. 2019

Different view points:

a) **A general specification**, which **avoids control interaction** and resulting harmonic over-voltages in any situation, might **be very conservative and impossible to fulfil**.

b) **A frequency bandwidth limitation (5 Hz to 1 kHz)** over which GFC controls should exhibit a Thevenin source behind an impedance type behaviour is advocated, in order to ensure stability for varying network topology over time and varying connection of generation.

System aspects and further approaches

Must-Run Units

- **Power sources running** without being in merit commercially, obliged to stay connected with the sole **purpose to provide capabilities described before**
- Some countries: rule base (minimum number of synchronous units running for system strength / stability reasons)
- Some countries: market for auxiliary services
- Combined heat and power may continue to run because of demand for heat

Synchronous Compensators / (Condensers (SCs)

- SCs can enhance the system strength
- Redundant synchronous generators could be converted to SCs
- New planned **synchronous generators could be equipped with clutches** to enable isolation from mechanical prime mover
- Installation of **flywheel systems to SCs** to increase voltage and inertia support capability

Maturity of GFC implementation

Experience with GFC to date is limited, but rapidly expanding:

- From a few MW, so far up to **a 30MW installation in South Australia.**
- So far the most **common adoption of GFC control is associated with BESS facilities** mainly linked to PV installations.
- For wind, the reported installations so far are limited to one 3MW WTG on test.
  - Presented here is a **23 turbine 69MW wind farm on test with GFC for 8 weeks with H up to 8s**
- GFC has so far been established in applications (mainly in microgrids) where it is required to ensure stable system operation already today **GFC has not yet been driven by future proofing large systems with approaching 100% PEIPS penetration.**
- The R&D associated with GFC is rapidly expanding and widening in its coverage with an extensive set of publications being delivered in the second half of 2019.
- **GFCs have not yet been established by the major manufacturers in their mass market converter products.**

Challenges of a possible transition to GFC for equipment suppliers operating in an increasingly competitive markets

- Delivering new capabilities **requires R&D resources** and hence incurs expenditure and time.
- Introducing GFC is a **major change.**
- Ensuring that the **desirable characteristics embedded in existing designs** developed over decades are **not lost** is essential.
- **Added capital cost** in mass manufacture is likely
  - mainly focused on **energy storage and increased converter rating.**

- Offering GFC as well as existing products adds complexity and cost.

- **Manufacturers need commercial incentives to proceed with GFCs,** implying willingness on the part of developers to pay a premium for the new capabilities.
  - Currently, such incentives do not exist (except in some microgrid contexts). They could arise from:
    - Mandatory requirements, such as those in grid codes.
    - Opportunities for additional revenue streams, e.g. ancillary services markets.
      - Compared to existing AS markets, services to deal with the range of issues (e.g. the seven here) arising from weak networks with potential low system strength appear more complicated
  - Negative incentives for non-compliant equipment, e.g. uncompensated constraining off.
  - In **GB the Stability Pathfinder process is in progress, may deliver cost / Effective MVA for alternatives**

Outstanding questions

- **What proportion** of the converter interfaced equipment need to have the seven characteristics in question?
- **Where and when** will the capabilities need to be **available**?
  - **Different urgencies** between small SAs (e.g. GB now) and countries in large SAs (e.g. CE later)
  - **Wind Europe suggest manufacturers need 5 years to prepare even after full spec / codes delivered**
- Are some types of converter interfaced equipment better suited to deliver GFC with these characteristics cheaper and more effective than others?
  - small embedded units versus larger units connected at higher voltages?
  - If a market driven approach is adopted, questions arise as to the **market design.**
  - Would available **capability or utilisation be remunerated**?
  - Would payments have to be **location-based**?
  - Could the **entire required range of services (seven covered here) be obtained on the market**?

Thank you!

The presentation is prepared based on the work of the authors of the report

„High Penetration of Power Electronic Interfaced Power Sources and the Potential Contribution of Grid Forming Converters"

by the ENTSO-E TG on High Penetration