University of Strathclyde ongoing research on grid forming converters

Dr Agustí Egea-Àlvarez
Power electronics Lecturer

25/03/2020 IEA webinar technical secure integration of large shares of converter based power sources

The power system is evolving… and GB is an especial case

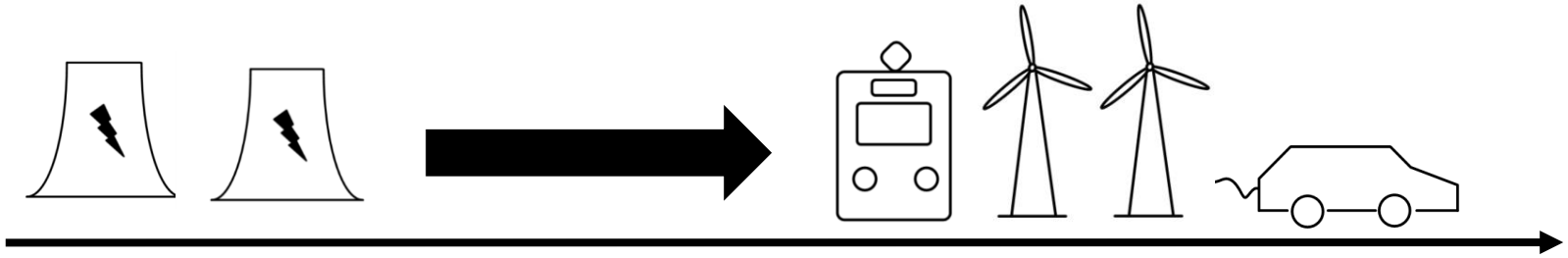

Past: 100% Synchronous based system

Present: 60% Synchronous, 40 %Converter?
40% Synchronous, 60 %Converter?

Future: 100% Converter based system???

- As a society, we have decided to fight the climate change, for example, decarbonising the electricity generation (go greener!!)
- More power electronics interfaced generation and loads...
  - **How** could this system be operated?
  - **What** are the **limits** of converter interfaced generation? If exists…
  - **What** do we need to do **differently**? (protections, controller gains?)
  - What is the **cost**?

9th of August 2019

Partial power cut affecting 1 million electrical consumers

National Grid blames lightning strike for blackout
The Guardian

Transport chaos across England and Wales after major power cuts BBC

Blackout raises alarms on UK energy resilience
High-tech economy is more vulnerable even to short-term power cuts Financial Times

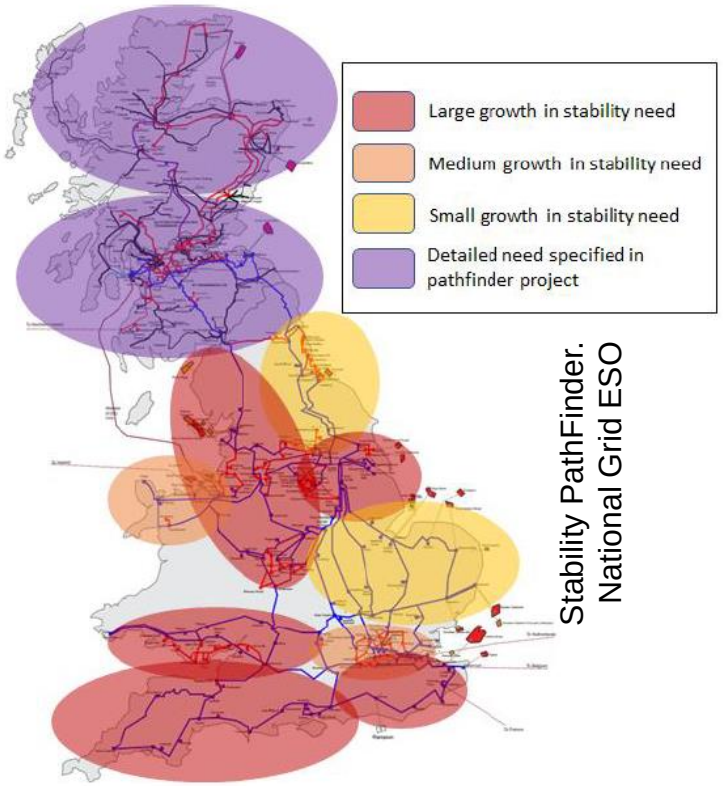

Stability PathFinder. National Grid ESO

Why converter based solutions?

Some people think that power converters should have a more active role in the power system control (grid forming) and/or some other people think that the converters should behave like a synchronous machine (virtual synchronous machines)

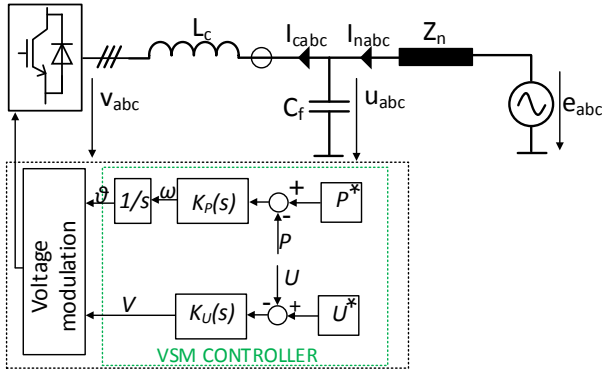

Simplified VSM converter control

Enhanced virtual synchronous machine (VSM) control algorithm for hybrid grid forming converters. Wind Integration Workshop 2019.

Solution	Estimated Cost	RoCoF [1] [2]	Sync Torque/Power (Voltage Stability/Ref) [2] [*] [4]	Prevent Voltage Collapse [2]	Prevent Sub-Sync Osc. / SG Compitable [2] [*]	Hi Freq Stability [2]	RMS Modelling [1] [2] [*] [4]	Fault Level [1] [2]	Post Fault Over Volts [2]	Harmonic & Imbalance [5]	System Level Maturity	Notes
Constrain Asyncronous Generation	Hgh	I	Yes	Yes	Yes	Yes	Yes	Yes	Yes	Yes	Proven	These technologies are or have the potential to be Grid Forming / Option 1
Syncronous Compensation or More Sync. Gens at lower load	High	I	Yes	Yes	Yes	Yes	Yes	Yes	Yes	Yes	Proven	
VSM	Medium	Yes	Yes	Yes	Yes	Yes	Yes	Yes	Yes	P	Modelled	
VSM0H	Low	No	Yes	Yes	No	P	P	P	Yes	P	Modelled	Has the potential to contribute but relies on the above Solutions
Synthetic Inertia	Medium	Yes	No	No	P	No	No	No	No	No	Modelled	
Other NG Projects	Low	Yes	P	Yes	No	No	No	P	P	No	Theoretical	

VSM/GF advantages:

- Inherent inertia response
- Frequency support
- Black/grey start capability
- Connection of VSC to weak grid
- Island mode
- Improve “apparent” SCR
- No Phase Locked Loop

VSM challenges:

- An external energy storage source might be required
- Oversized/additional converter
- Unbalanced/harmonics control
- No inherent current control*
- No inherent Fault Ride Through*
- Potential interactions/resonances

Some of the GF/VSM research projects that we are involved

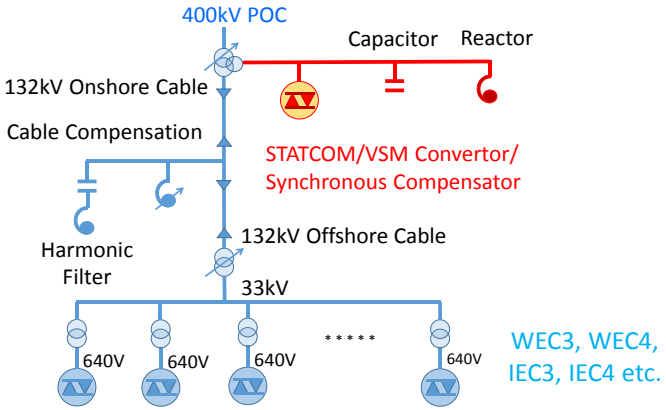

Provision of GF/VSM using a battery. **(National Grid ESO)**

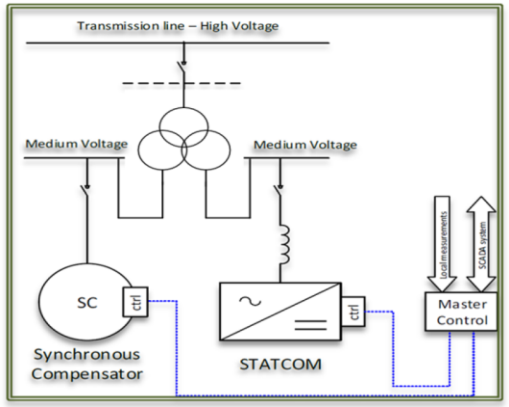

Hybrid STATCOM and synchronous compensator **(ScottishPower Energy Networks)**

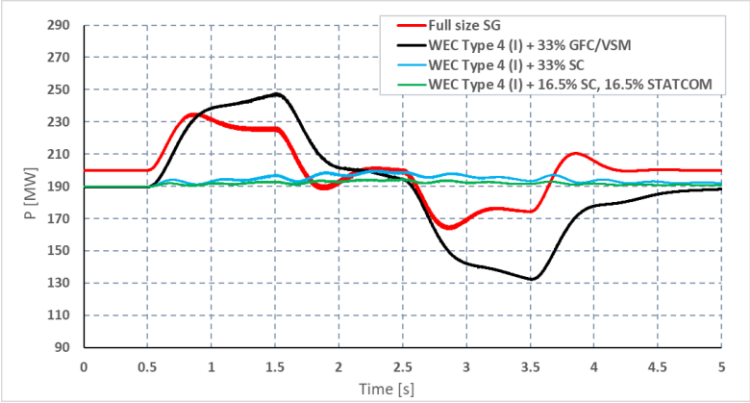

Provision of GF/VSM services in at the PCC of an offshore wind farms. **(National grid ESO)**

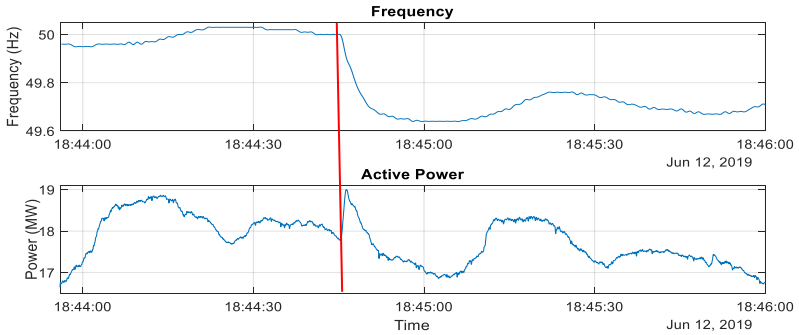

Assessment of VSM results in a Scottish wind farm. **(ScottishPower renewables)**

- Other VSM/GF projects and PhD studentships:
  - Interaction of VSM controlled wind farms (**Siemens Gamesa Renewable Energy**)
  - Fault ride through of grid forming converter without PLL and current loop (**OREC**)
  - Sizing and location of energy storage for grid support in Scotland (**ScottishPower Renewables**)
  - Impact of grid forming converters into the protection system