Future solutions for high shares of converter based sources

X. GUILLAUD – professor Ecole Centrale de Lille - France

Some perspectives

Xavier.Guillaud@centralelille.fr

L2EP Laboratoire d'électrotechnique et d'électronique de puissance de Lille

Université de Lille

centralelille

Arts et Métiers Institute of Technology

HEI INGÉNIEURS POUR LE MONDE

yncréa

- Many works have already been achieved on electrical power system with a large share of power electronic converter.

- Our research lab : L2EP, has been involved in Migrate project : WP3 « 100% power electronic converters power system » with RTE as the work package leader.

- The aim of this short presentation is not to make a summary of WP3 but to propose some fundamentals thinkings about two key points:

  - Standard models for grid forming controls
  - Transient stability and grid forming converters

Standard models for grid forming controls

- The dynamic behavior of synchronous machines is mainly driven by its electro technical parameters. Some few IEEE standard controls have been developed as reference controls mainly depending on the type of excitation. They are accepted by the community

- In a power electronic converter, the dynamic behavior is mainly driven by its control. Hence, it is possible to develop many type of controls.

- For the grid forming control, many papers have already been published on the subject of grid forming controllers with many different names for the control : drop control, virtual synchronous machine, synchronverter, virtual oscillator, matching control .. It is not straightforward to make a fair comparison.

- Need to define some standard models as reference models where it is possible to characterize easily the main functionalities in term of:
  - Accuracy of the active power control: → **still the main quantity to control in most of the power electronic converter.**
  - Inertial effect
  - Primary frequency support.

  } → **Ancillary services for the power system**

All the new controls should be tested on a dedicated use case and prove what they really bring compare with the standard models

Standard models for grid forming controls

- In L2EP, we have made some fundamental thinking to build some controls from scratch, identify the main functionalities which can be achieved by the grid forming converters and then propose three main types of control.

- This controls have been tested in term of robustness against the strength of the grid (grid impedance), frequency variations .. on a small and a multipurpose test bench

- This public models are available on https://github.com/l2ep-epmlab/

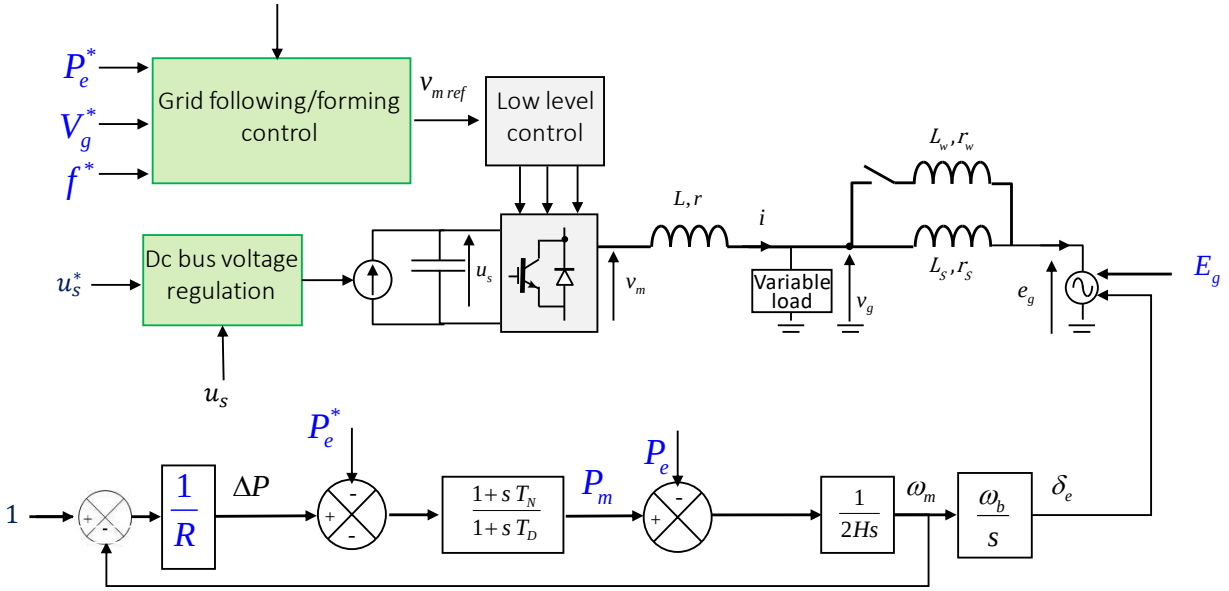

- This controls have been also been tested on a mock up developed within Migrate project

MIGRATE

T. Qoria, F. Gruson, F. Colas, G. Denis, T. Prevost, and X. Guillaud, "Inertia effect and load sharing capability of grid forming converters connected to a transmission grid," *Proc. of the 15th IET International Conference on AC and DC Power Transmission (ACDC 2019)*, 2019

E. Rokrok, T. Qoria, A. Bruyere, B. Francois, and X. Guillaud, "Effect of Using PLL-Based Grid-Forming Control on Active Power Dynamics Under Various SCR," *Proc. of the 45th Annual Conference of the IEEE Industrial Electronics Society (IECON)*, pp. 4799–4804, 2019.

Transient stability and grid forming converters

No inherent current limitation is embedded in a grid forming converter. However, a current limitation has to be activated in case of a possible overcurrent. Two mains solutions:

- Current saturation algorithm (CSA)
- Virtual impedance (VI)

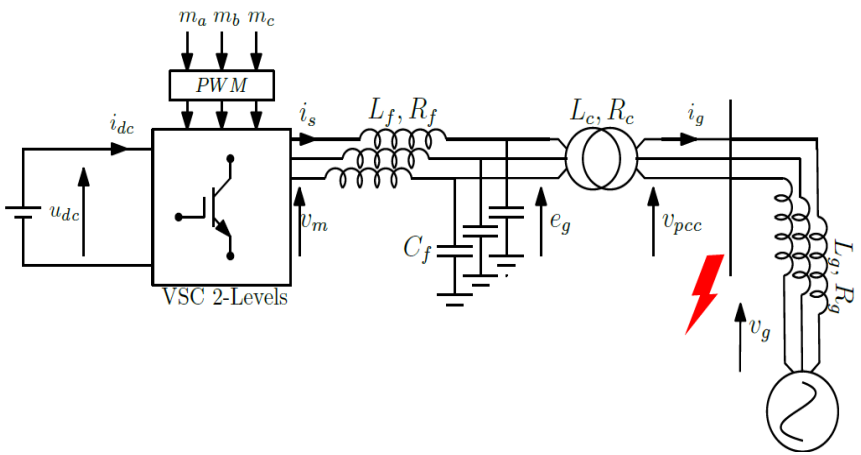

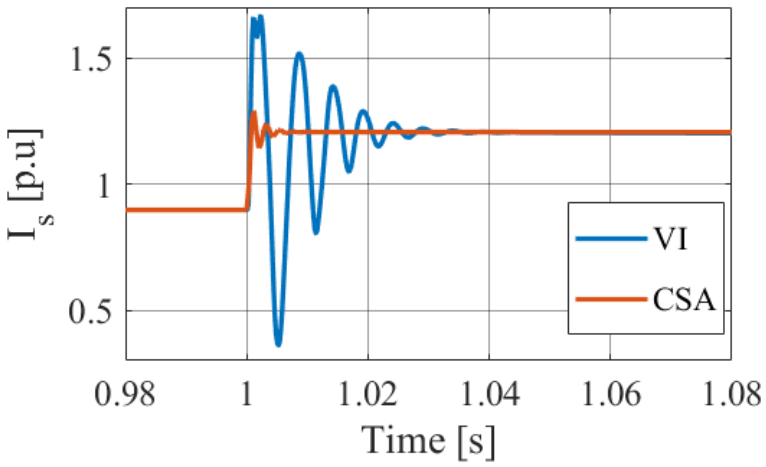

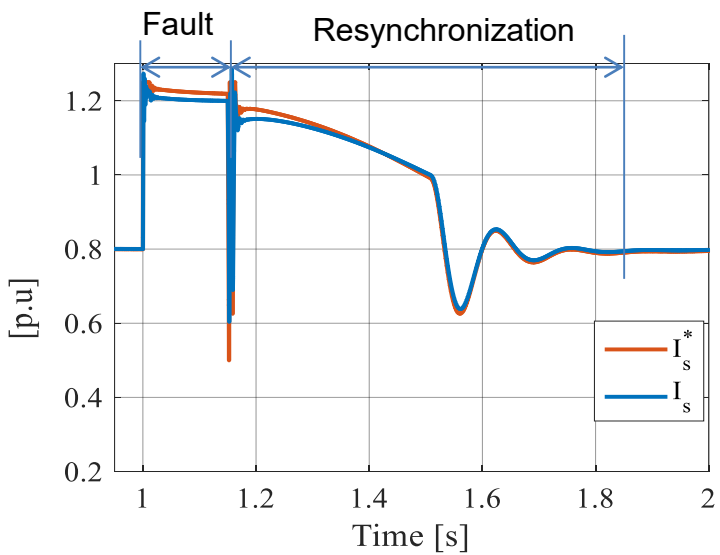

Simulation and experimentation

In L2EP, a hybrid control has been developed in order to take advantage of both types of control:

Better current limitation capabilities of a classical current saturation algorithm

Better transient stability behavior with the virtual impedance : improvement of the resynchronization after a fault

T. Qoria, F. Gruson, F. Colas, X. Guillaud, "Current Limiting Algorithms and Transient Stability Analysis of Grid-Forming VSCs," *Proc. of the 21st Power Systems Computation Conference (PSCC)*, 2020.

T. Qoria, F. Gruson, F. Colas, G. Denis, T. Prevost, X. Guillaud , "Critical clearing time determination and enhancement of grid forming converters embedding virtual impedances as current limitation algorithm IEEE JESTPE 2019 | Early Access Article

Transient stability and grid forming converters

Things are becoming clearer in case of a balanced short-circuit with a grid forming converter.

A lot of work is still pending in case of unbalanced short circuit to propose a good current limitation algorithm which protect separately the different phases.

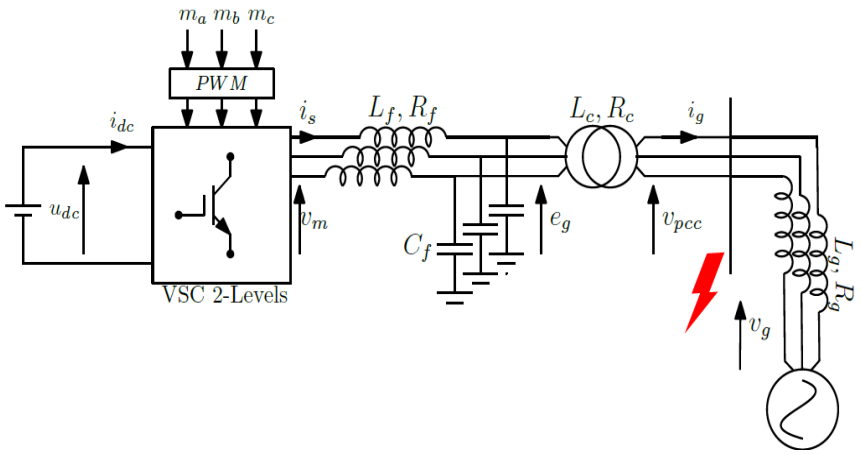

L2EP
Laboratoire d'électrotechnique et d'électronique de puissance de Lille

Thank you for your attention

Bibliographic references

- T. Qoria, F. Gruson, F. Colas, G. Denis, T. Prevost, and X. Guillaud, “Inertia effect and load sharing capability of grid forming converters connected to a transmission grid,” *Proc. of the 15th IET International Conference on AC and DC Power Transmission (ACDC 2019)*, 2019

- E. Rokrok, T. Qoria, A. Bruyere, B. Francois, and X. Guillaud, “Effect of Using PLL-Based Grid-Forming Control on Active Power Dynamics Under Various SCR,” *Proc. of the 45th Annual Conference of the IEEE Industrial Electronics Society (IECON)*, pp. 4799–4804, 2019.

- E. Rokrok, T. Qoria, A. Bruyere, B. Francois, and X. Guillaud, “Classification and Dynamic Assessment of Droop- Based Grid-Forming Control Schemes: Application in HVDC Systems,” *Proc. of the 21st Power Systems Computation Conference*, 2020.

- T. Qoria, F. Gruson, F. Colas, X. Guillaud, M. S. Debry, and T. Prevost, “Tuning of cascaded controllers for robust grid-forming voltage source converter,” *Proc. of the 20th Power Systems. Computation Conference*, 2018.

- T. Qoria, C. Li, K. Oue, F. Gruson, F. Colas, and X. Guillaud, “Direct AC voltage control for grid - forming inverters,” *Journal of Power Electronics*, no. 0123456789, 2019.

- T. Qoria, F. Gruson, F. Colas, X. Guillaud, “Current Limiting Algorithms and Transient Stability Analysis of Grid-Forming VSCs,” *Proc. of the 21st Power Systems Computation Conference (PSCC)*, 2020.

- T. Qoria, F. Gruson, F. Colas, G. Denis, T. Prevost, X. Guillaud , “Critical clearing time determination and enhancement of grid forming converters embedding virtual impedances as current limitation algorithm IEEE JESTPE 2019 | Early Access Article

- https://www.h2020-migrate.eu/downloads.html

- https://github.com/l2ep-epmlab/